Drawing No.
P 1050

Before using this drawing, confirm that it has not been superseded.

© CROWN COPYRIGHT

NOTES: 1. COLOUR : Arrows --- WHITE

2. The overall length depends on the chosen width between the arrow heads.

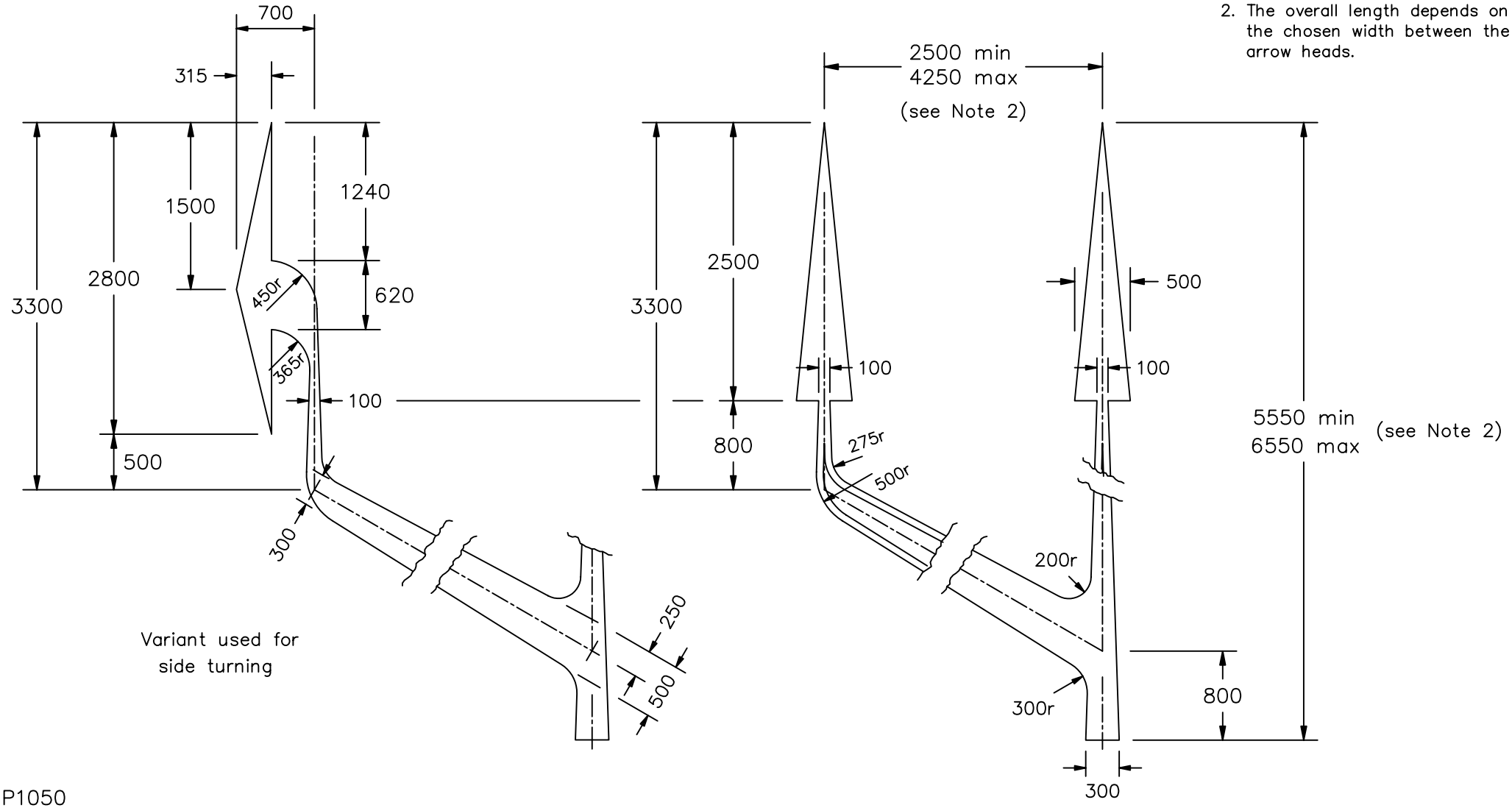

P1050

Department for Transport	Title: Road Markings DOUBLE ARROW AT END OF BUS LANE	Issue: A: B: C:	Date: 30.6.94 18.2.05	Drawn by: S.P. Approved by: R.M.	Dimensions: MILLIMETRES	Drawing No. P 1050